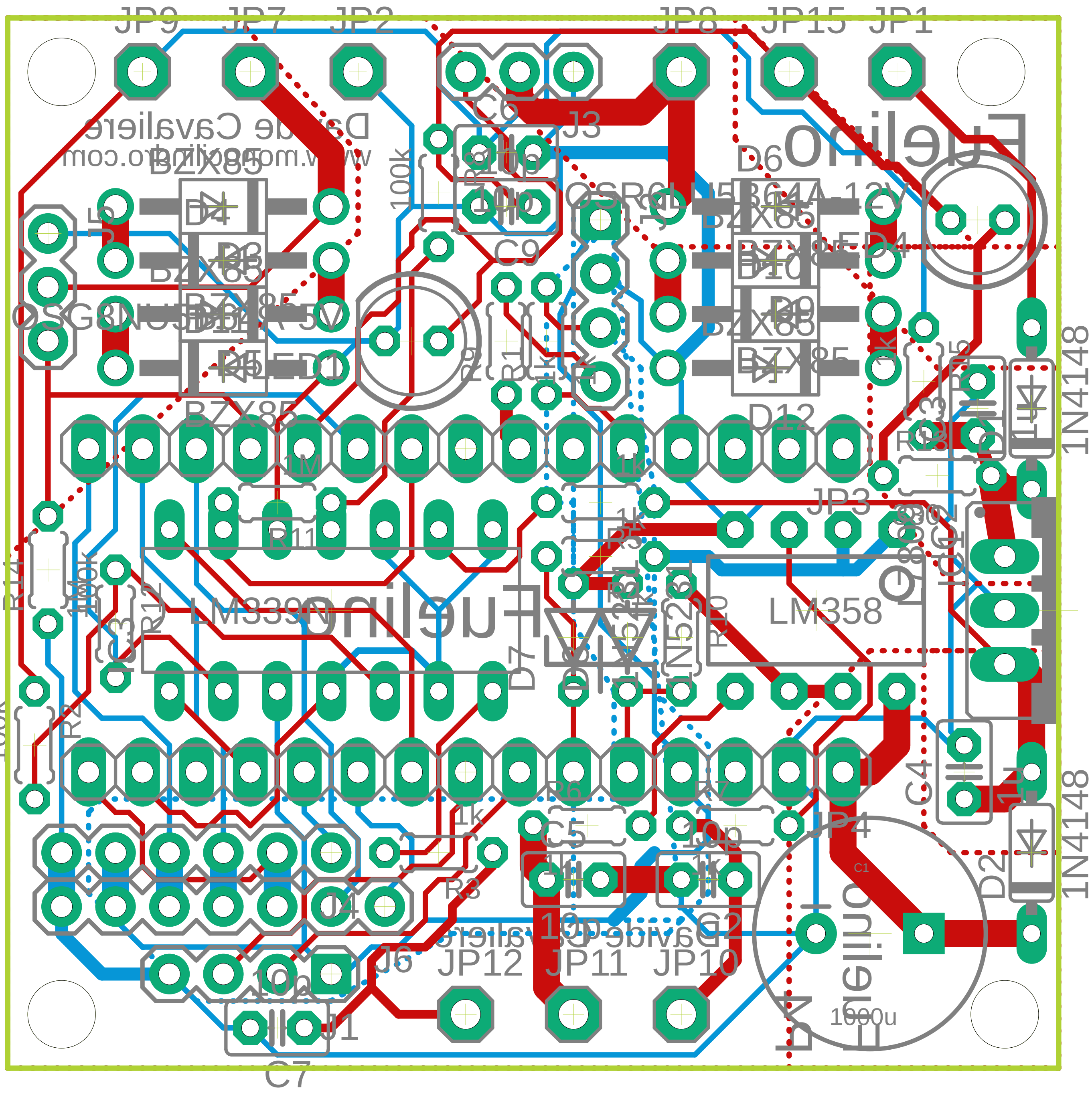

JP9
JP7
JP2
JP8
JP15
JP1
J3
J5
C9
D6
D12
JP3
LM339N
LM358
R11
R3
C4
C7
C5
J4
J6
JP12
JP11
JP10
1N4148
1N4148
100k
100k
1000u
Fuelino